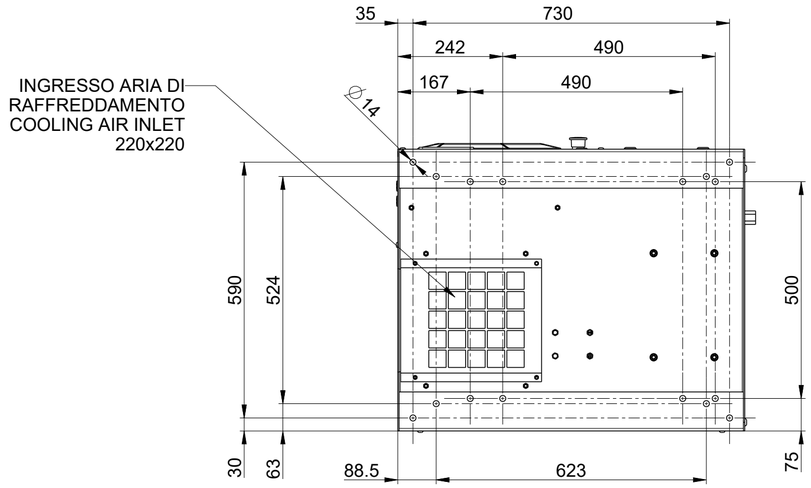

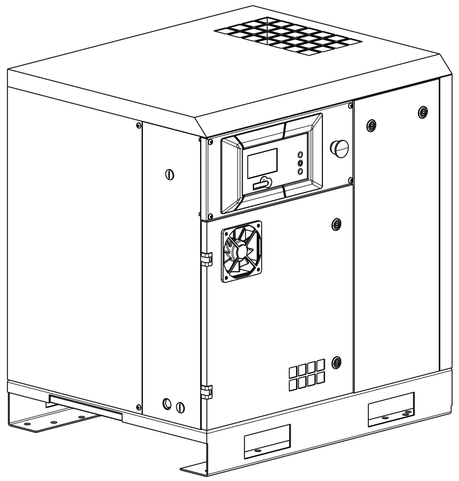

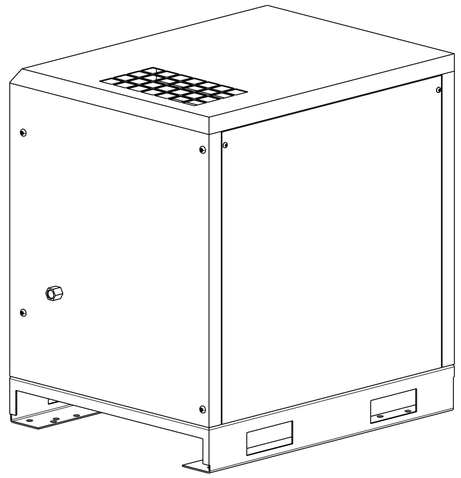

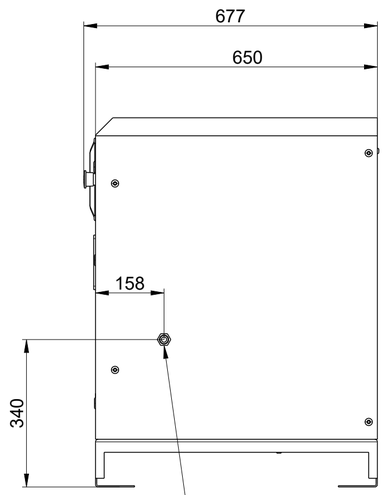

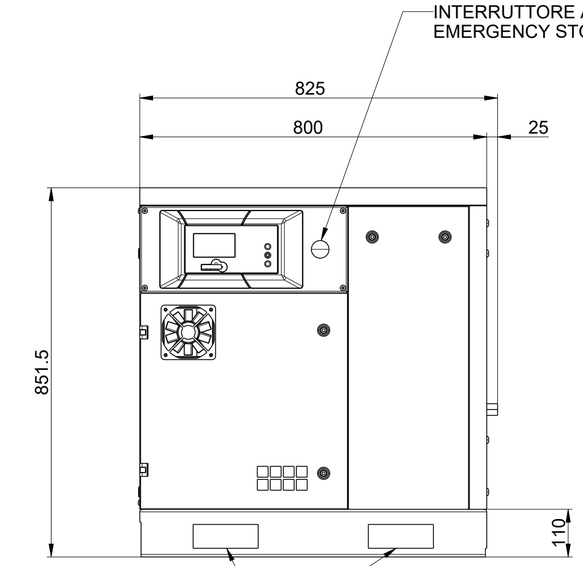

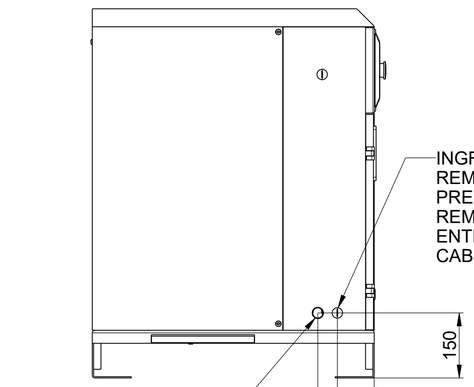

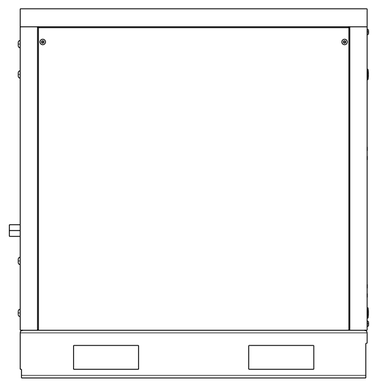

PUNTI DI SOLLEVAMENTO
LIFTING POINTS

INGRESSO CAVI
ALIMENTAZIONE
PRESSACAVO M25
POWER SUPPLY
CABLES ENTRY
CABLE GLAND M25

USCITA ARIA
COMPRESSA G1/2"
COMPRESSED AIR
OUTLET G1/2"

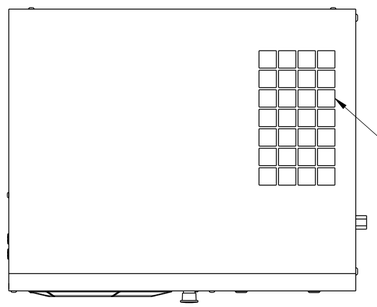

USCITA ARIA DI RAFFREDDAMENTO
DIMENSIONI: 310 x 175
COOLING AIR OUTLET
DIMENSIONS: 310 x 175

N°	MODIFY DESCRIPTION	DATE	SIGN.
-	-	-	-

	DRAWN	REPLACE	COMPETENCE OF	DIMENSION WITHOUT TOLLERANCE INDICATION	ALL DIMENSIONS ARE IN MILLIMETERS	SCALE
DATE	2022-03-25		R&D	ISO 22768-1-m		1:10
SIGN.	BECCARINI					

RUGOSITI Ra um | NOT INDIC. CHAMFER | HEAT/SUPERFICIAL TREATMENT | HARDNESS | MATERIAL --

FNA by Cordoni family
The great family of air compressors.

DRAWING DESCRIPTION
DIM_INGOMBRO_007.5_DV_COAX_20 LGN

This drawing is propriety of FNA S.p.A. Hand over or reproduction, partial as well, is forbidden at any level. Each abuse will be legally prosecuted

DRW.N° DIM1049 | A2 | PAGE 1 OF 6